BAS-MOBILIAR

# Gibo

JG10

1+

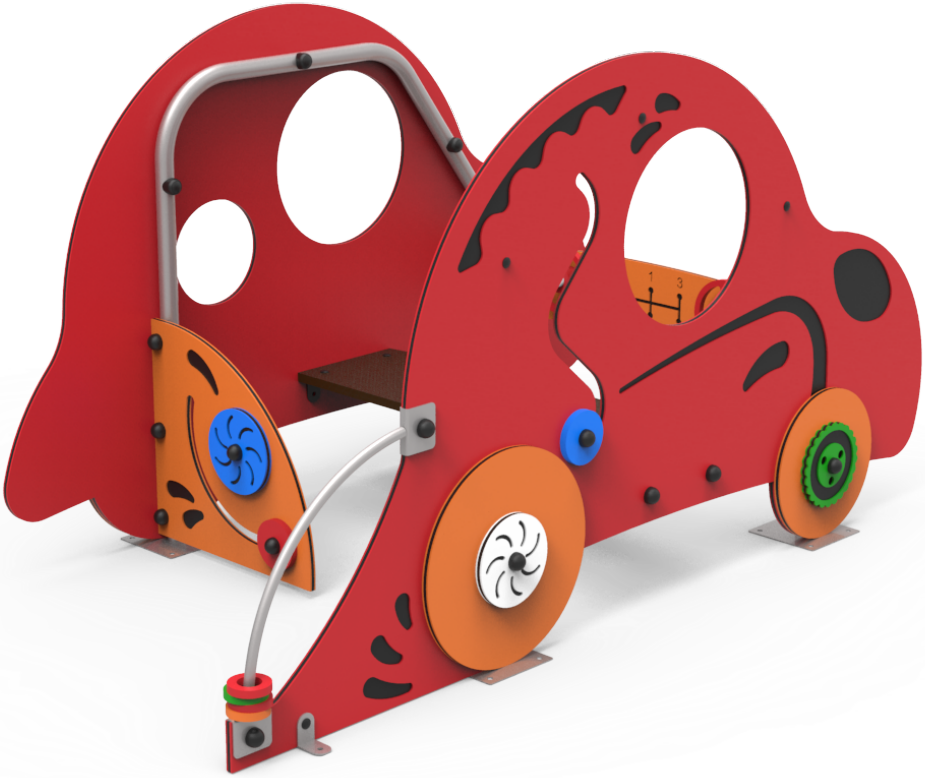

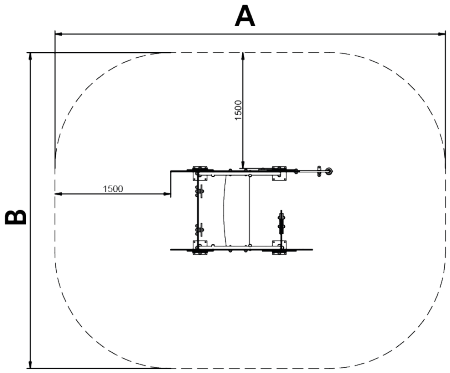


**Structure, Metal:** Ø35mm stainless steel AISI-304 posts. 2mm thick AISI 304 polished stainless steel slide surface curved and molded in one piece.

| A x B | | | |
|---|---|---|---|
| A=5060mm | 19m2 | 0.30m | 7 |
| B=4090mm | | | |

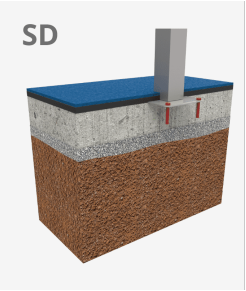


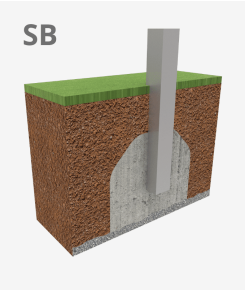


V. 2026-10-07 | The constant improvement and evolution of our products may result in some modifications of the technical specifications and characteristics of the products without prior notice.

## Materials:

**Panels, HDPE:** high-density polyethylene characterised by its resistance to chemical abrasives. As a polymer, it is unaffected by corrosion. Due to its light elastic nature, it offers high resistance to impact, making it very difficult to break

**Platforms, Phenolic:** birch plywood coated with a phenol film on both sides. Wire mesh anti-slip surface. Waterproof lateral protection.

**Fixings:** electro galvanised and stainless steel quality 8.8 DIN267, AISI-304.

- None of the materials requires a specific treatment for its disposal.
- If the product is subject to severe use, maintenance should be increased.
- Don’t use the product before the installation/maintenance is ready.
- Please check the maintenance instructions.

Biggest part (mm): / Heaviest part (kg):

**IMPACT ZONE:** security area and ground coverings according to the EN1176-1:2017 standard.

Spare parts availability: 10 years.

Ground anchoring screws not included.

## Playful features:

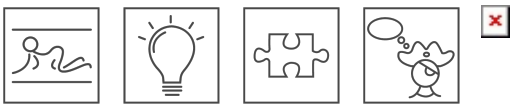

## Alternatives:

JG09

JG02

JG08

V. 2026-10-07 | The constant improvement and evolution of our products may result in some modifications of the technical specifications and characteristics of the products without prior notice.

V. 2026-10-07 | The constant improvement and evolution of our products may result in some modifications of the technical specifications and characteristics of the products without prior notice.